ALF218

Column load cell

- **Measurement ranges 0 … 100 kN to 0 … 400 kN**
- **Compression**
- **Non-linearity 0.5 % RL**
- **Output signal 2.3 mV/V or rationalised 2.0 mV/V ±0.5 %**
- **Supply voltage 10 VDC, max. 20 VDC**

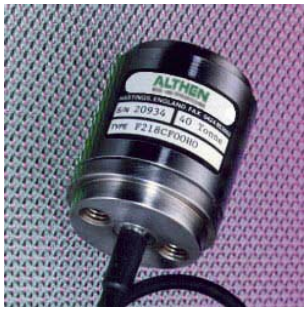

The ALF218 is ideally suited to engineering force measurements. Its high structural load capacity and the frequency response characteristic of this principle of strain sensing make this loadcell ideal for non-sacrificial impact load measurements.

Geometry:
Small column in a sealed case, with a domed top load bearing face. For use in compression.

Dimensions

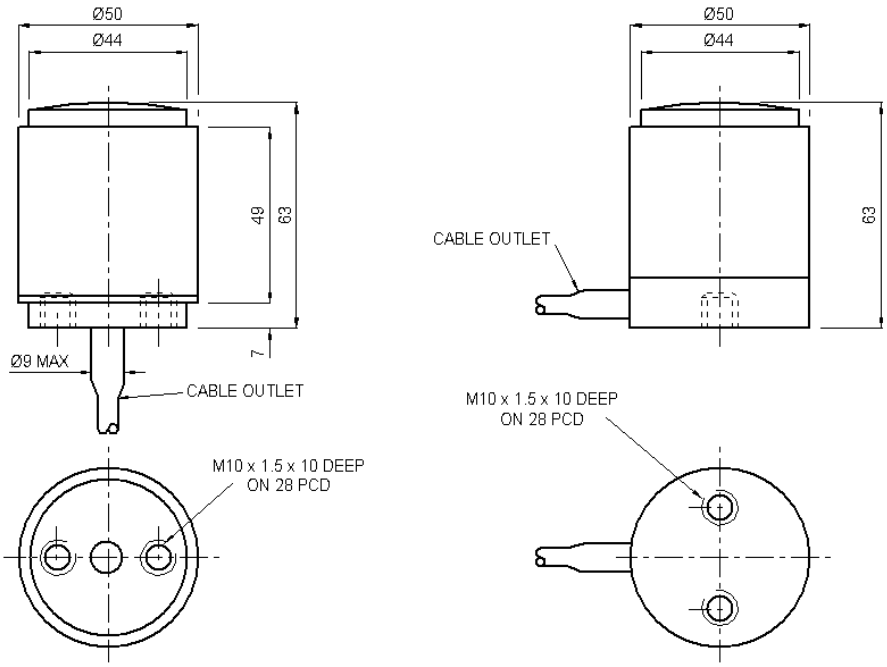

Dimensions in „mm“, approx. values

These drawings are for information only and not intended for construction purpose.
Please contact us for detailed drawings.

ALTHEN GmbH Mess- und Sensortechnik
Frankfurter Str. 150 - 152 ☏ +49 6195 70060 http://www.althensensors.com
65779 Kelkheim / Germany 🖷 +49 6195 700666 info@althen.de

ALTHEN MESS- UND SENSORTECHNIK

Specification

Rated load:	100 kN / 200 kN / 400 kN
Calibration:	Compression
Non-linearity, terminal:	±0.5 % RL
Hysteresis:	±0.5 % RL
Creep, 20 min:	±0.05 % AL
Repeatability:	±0.02 % RL
Rated output, nominal:	2.3 mV/V
Rated output, rationalised:	2.0 mV/V ±0.5 % RL
Zero load output:	±4 % RL
Temperature effect on rated output:	±0.005 % AL/K
Temperature effect on zero load output:	±0.005 % RL/K
Compensated temperature range:	-10 … +50 °C
Operating temperature range:	-10 … +80 °C
Supply voltage, recommended:	10 V
Supply voltage, max.:	20 V
Bridge resistance:	700 Ω
Insulation resistance, minimum at 50 VDC:	500 MΩ
Overload, safe:	150 % RL
Overload, ultimate:	400 % RL
Sealing:	IP65
Weight (excl. cable):	approx. 0.75 kg to 1 kg

Rated load	Structural stiffness, nom.	Rated load	Structural stiffness, nom.	Rated load	Structural stiffness, nom.
100 kN	1.7×10^9 N/m	200 kN	3.4×10^9 N/m	400 kN	6.8×10^9 N/m

Notes:
1. RL = rated load
2. AL = applied load
3. Temperature coefficients apply over the compensated range.
4. The load must be applied directly through the central loading axis.
5. It is essential to use load cells with rationalised output when operating several load cells (e. g. hopper, platform etc.) in parallel mode!

Options

- Version for 6-conductor operation available
- Integrated electronics for output 4 … 20 mA

Electrical Connection

The load cell is fitted with 2 m of PVC insulated 4 core screened cable type 7-2-4C.
The screen is not connected to the loadcell body.

Wiring:	
red	+ supply voltage
blue	- supply voltage
yellow	+ output signal
green	- output signal
orange	screen

Ordering Codes

ALF218CFR0K0	Compression, IP65, side cable entry	ALF218CFR0KN	Compression, IP65, side cable entry, rationalised

If a non-standard cable length or bottom cable entry is required add this to the description and change the F to B.
Please add range in the required units.

Our policy is to improve specification of our products continuously, so technical and production details can be changed without any notice.

ALTHEN GmbH Mess- und Sensortechnik
Frankfurter Str. 150 - 152 ☏ +49 6195 70060 http://www.althensensors.com
65779 Kelkheim / Germany 🖷 +49 6195 700666 info@althen.de