ALTHEN SENSORS & CONTROLS

bar PM4 Series

This miniature pressure sensor is designed to perform static and dynamic measurements in harsh environment. Fully made in titanium, this flush membrane sensor is compatible with a large number of corrosive and/or conductive fluids. Available in low level output capable of delivering a precise and fast responding analog signal.

MESUREX SENSORS
AUTHORIZED DISTRIBUTOR

SPECIFICATIONS

INPUT						
Pressure Range (FS) BAR PSI	5 75	10 150	20 300	50 750	100 1500	200 3000
Pressure Type	Relative or Sealed				Sealed only	
Over Pressure	2 x Pressure range					
Burst Pressure	5 x Pressure range					
Pressure Media	Any Liquid or Gas Compatible with Titanium					
Supply voltage	10 VDC regulated					
Input Impedance	1200 Ω					
OUTPUT						
Full Scale Output (FSO) @ 10 VDC	30 mV ± 50%	60 mV ± 50%	100 mV ± 50%			
Output Impedance	1200 Ω					
Zero offset	± 10 mV					
Non-Linearity	± 0.5% FS	± 0.35% FSO				
Hysteresis	± 0.25% FS					
Repeatability	± 0.2% FS					
Insulation	> 100 MΩ @ 50 VDC					
ENVIRONMENTAL						
Operating Temperature Range (OTR)	-40 °C to 120 °C					
Compensated Temperature Range (CTR)	0 °C to 60 °C [1]					
Thermal Zero Shift over CTR	± 5% FS / 50 °C	± 2.5% FS / 50 °C				
Thermal Sensitivity Shift over CTR	± 2% FS / 50 °C					
PHYSICAL						
Resonant frequency[2] kHz	224	224	299	374	474	673
Electrical Connection	2m shielded cable, 4x30 AWG, silicone jacket [1] Or Comtronic connector CMR-02-E-04P (supplied with mating connector CMR-02-B-04S on 2m cable)					
Mechanical Connection	M4x0.7					

10/06/2026 | version 0001

SPECIFICATIONS (CONTINUED)

Index of Protection	IP50 IP67 (see Options)
Sealing	BS Ring Ø15.88mm x 2mm (-40°C to 135°C)
Mounting Torque	1.8 Nm (recommended), 3 Nm maximum

[1] *See options in Order guide table*
[2] *The suggested operating frequency is 20% of the resonant frequency*

DIMENSIONS

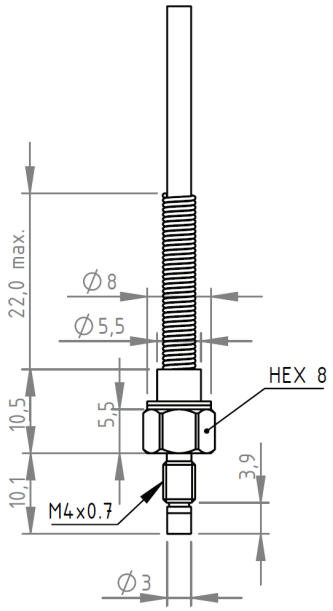

Cable ouput model

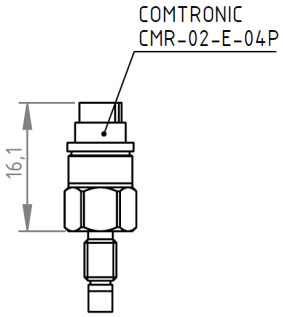

Connector output model

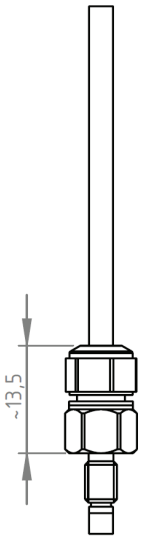

IP67 model

WIRING

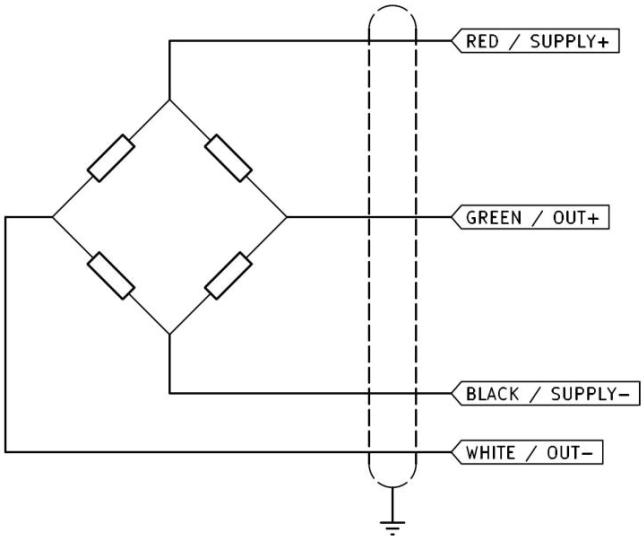

10/06/2026 | version 0001

ORDER GUIDE

Example:

PRM4C300P/L6M

Pressure type: relative pressure
Measuring range: 300 PSI
Output: Standard cable output
Cable length: 6m

PSM4C5B/P67

Pressure type: sealed pressure
Measuring range: 5 BAR
IP67 **output**
Cable length: 2m (standard)

P	M4 Mounting Miniature Pressure Sensor

Code	Pressure Type
R	Relative pressure
S	Sealed pressure

Code	Description
M4	Thread

Code	Output model
C	Cable output model
M	Connector output model

Code	Description
X	Measuring range

Options	
Code	**Compensated temperature range**
None	0°C to +60°C (standard)
C1	0°C to +120°C
C2	-40°C to +120°C

Code	Cable length
None	2m standard length
LxxM	xx: custom length in meter
LxxF	xx: custom length in foot

Code	Index of protection: IP67
P67	only available on cable output

P	R	M4	C	X	C1	LxxM	P67	Complete Type Specification

The information provided herein is to the best of our knowledge true and accurate, it is provided for guidance only. All specifications are subject to change without prior notification.

Althen is the innovative sensor expert that creates integrated sensor and measurement solutions for the creators of tomorrow | althensensors.com

We create integrated sensor and measurement solutions. In addition we offer services such as calibration, repairs, design & engineering, training and renting of measurement equipment.

Benelux sales@althen.nl
Germany/Austria/Switzerland info@althen.de
France info@althensensors.fr
Sweden info@althensensors.se
USA/Canada info@althensensors.com
Other countries info@althensensors.com